CYCLOP L CL3057

DATASHEET

17 NOVEMBER 2026



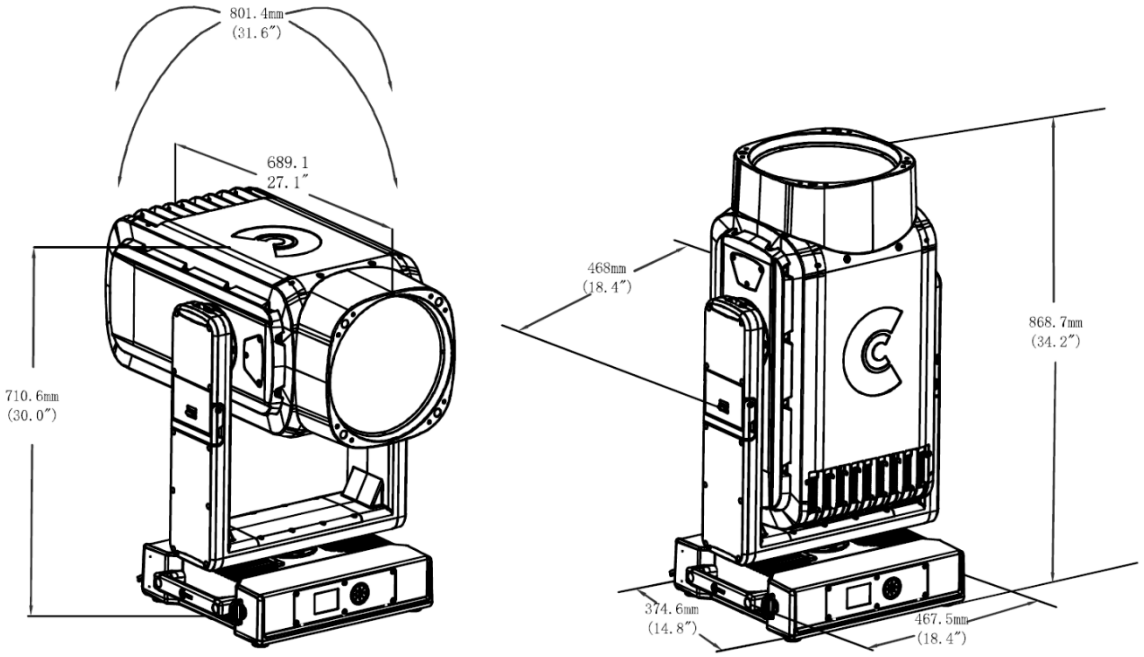

LIGHT SOURCE:

Power:	• 1,300W white LED engine
Color temperature:	• 6,000K
CRI:	• 70+ and over 88 with additional filter on color wheel
LED life expectancy:	• 50,000 Hrs L70*

* *It may vary depending on various factors, such as the type of use and environment*

PHOTOMETRIC DATA:

Zoom range:	• 2.8° - 45.0°
lm output:	• >50,000 lm (integrating sphere)
Front lens:	• Ø 270 mm (10.62 in)
Optical system:	• High efficiency

NOISE LEVEL:

Fixed presets:	Full mode:	46.5 dBA
	Medium mode:	37.5 dBA
	Silent mode:	34.2 dBA
	Ultra silent mode:	32.1 dBA

CONTROL & CONNECTIONS:

Personalities:
- 2 modes:
  - **Standard**: 51 channels
  - **Extended**: 65 channels

Protocols:
- DMX, Art-Net, sACN, RDM, NFC/Bluetooth
- CRMX (Timo FX) (Lumen Radio)
- CLAYPAKY Connectivity Board

Connectors:
- Locking 5 pin XLR IN/OUT
- RJ45 IN/OUT

Power con.:
- PowerCon True1 IN

Web server:
- Built-in

CloudIO:
- Fully compatible

DYNAMIC EFFECTS:

Colors:
- Linear CMMY/CTO color mixing
- Linear CTO filter 3,000K – 6,000K
- 2 color wheels with 5 dichroic colors, TINT channel

Framing Systems:
- 4 blades 16 bit (± 35° inclination) with ± 90° rotation of the full system
- “Total Curtain" effect allowing full blackout with each single blade
- Built-in macros

Gobos:
- 2 rotating gobo wheels with 6 interchangeable glass gobos

Frost:
- 2 frost filters: 1 heavy and one soft

Rotating effects:
- 1 four-facet conical prism with rotation in both directions at variable speed
- 1 four-facet linear prism with rotation in both directions at variable speed
- 1 aluminium animation disc with continuous rotation in both directions at variable speed movement

Iris:
- 16 blades
- Motorized with variable pulse effects

Movement:
- Tilt: 270°
- Pan: 540°
- Automatic repositioning
- Tilt brake
- Mechanical Pan/Tilt lock for safe transportation and maintenance

Beam:
- Motorized zoom and focus 16 bit

Dimmer / Shutter:	• High resolution electronic dimmer - 24 bit, 5 curves • High speed electronic shutter and strobe

HARDWARE & SOFTWARE:

- Long life self-charging battery
- Display graphic LCD backlit
- Firmware upload from another fixture
- Firmware upgrade via Web Server
- Diagnostic
- DMX monitoring
- Remote access through RDM
- Full firmware uploader
- DewOut patented Active Dehumidification System
- Sun safe protection

HOUSING:

- Magnesium and steel structure with plastic components
- Two side handles for transportation
- IP66 protection rate
- Working in any position
- Hanging system: with fast-lock Omega clamps (1/4 turn on the base)
- Optional safety chain
- Rubber bumper for lens protection

ELECTRICAL:

Operating voltage:	• 100-240V, 50/60 Hz
Power Supply:	• Electronic auto range with active PFC
MAX power consumption:	• Max 1,750W (16.0A) @ 110V – 1,700W (7.4A) @ 240V

THERMAL SPECIFICATIONS:

MAX Ambient temperature:	• 45°C (113°F)
Min Ambient Temperature:	• -20°C (-4°F)

SAFETY SPECIFICATIONS:

Min. dist. of illum. objs:	• 8.0 m (314.9 in)
Min. dist. from flamm. mat.:	• 0.2 m (8.0 in)
Protections:	• Thermally protected power supply (overheating and cooling failure) • Forced ventilation with axial fans • Battery fuse: T6.3A 250V • Main fuse: T20A 250V

COMPLIANCE:

CE Marking (in conformity to the following):

- 2014/53/EU - Radio Equipment Directive (RED)
- 2011/65/EU - Restriction of the use of certain hazardous substances (RoHS)
- 2009/125/EC - EcoDesign requirements for Energy-related Products (ErP)

UKCA conforms to UK regulations:

- S.I. 2017 N.1206
- S.I. 2012 N.3032
- S.I. 2021 N.745

cMETus LISTED:

- UL 1573:2003
- CSA C22.2 N.166:2015

EAC conforms to RUSSIAN regulations:

- TR CU 004/2011
- TR CU 020/2011
- TR CU 037/2016

PACKAGING:

- Carton box + Polystyrene
- Carton box + Foam shell
- Flight case + Foam shell

WEIGHT & SIZES:

Weight:	• 55.8 kg (123.0 lb)
Base dim.s:	• 375 x 467 mm • 14.76 x 18.38 in
Height with vert. head (h):	• 868.7 mm • 34.2 in
Dist. b/t 2 fixt:	• 810 mm • 31.89 in
Max size:	• 375 x 467 mm • 14.76 x 18.38 in

ACCESSORIES:

Omega bracket:	• 2x183102/805 (Included)
ETL Power:	• CAB02B/802 (Included)* ** Cord 1.5 m (bare end with IP65 PowerConTrue1 conn.)*
Flight case + foam shell:	• CF1058F (Optional)
Safety Chain:	• 105041/001 (Optional)
Clamp:	• C21070 (Optional)

WARNING: THE INFORMATION IN THIS DOCUMENT IS SUBJECT TO CHANGE WITHOUT NOTICE AND SHOULD NOT BE CONSTRUED AS A COMMITMENT BY CLAY PAKY S.R.L.